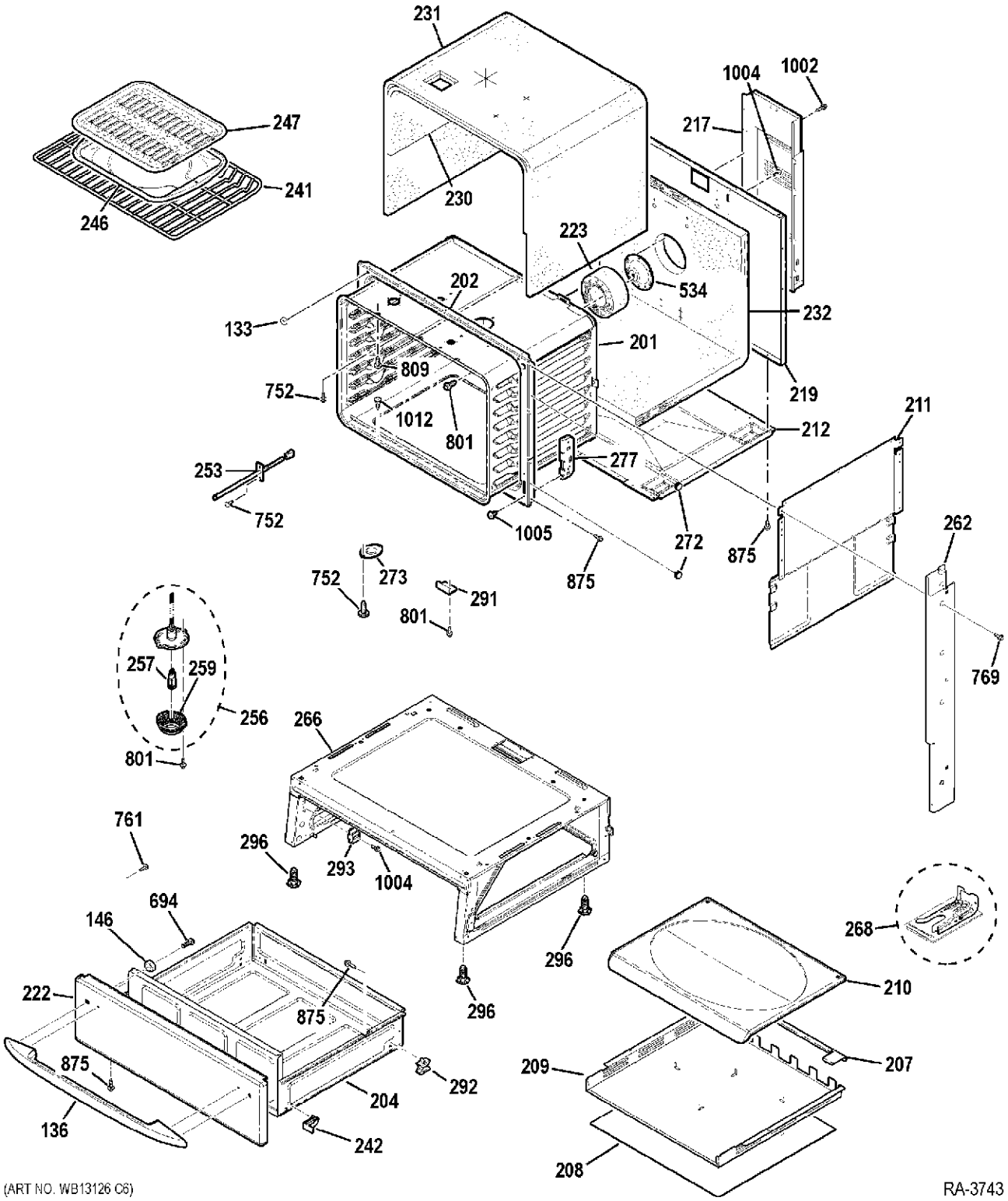


(ART NO. WB13126 C6)

RA-3743