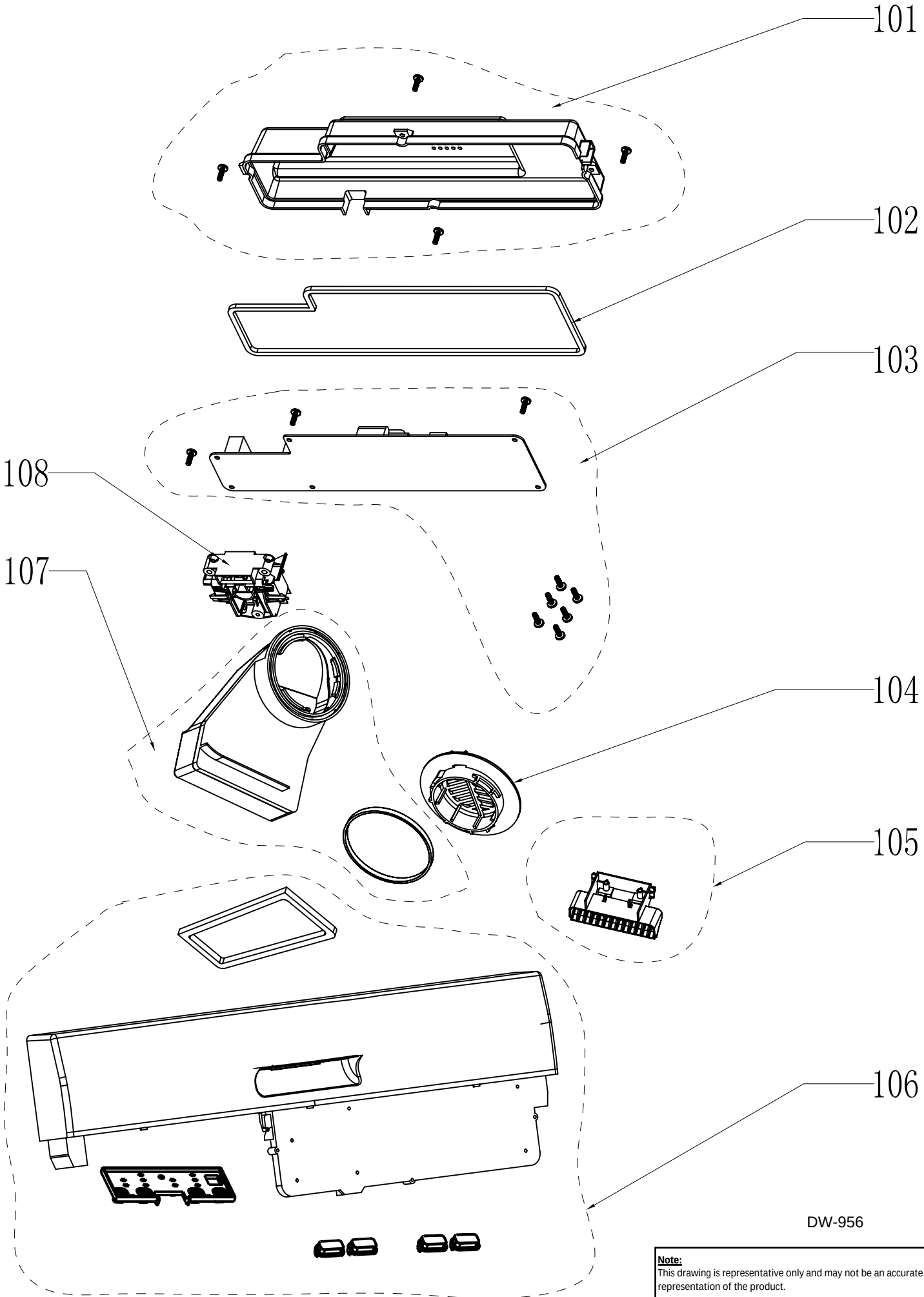

DW-956

Note:
This drawing is representative only and may not be an accurate representation of the product.

Contact you Parts Dealer should any questions arise.