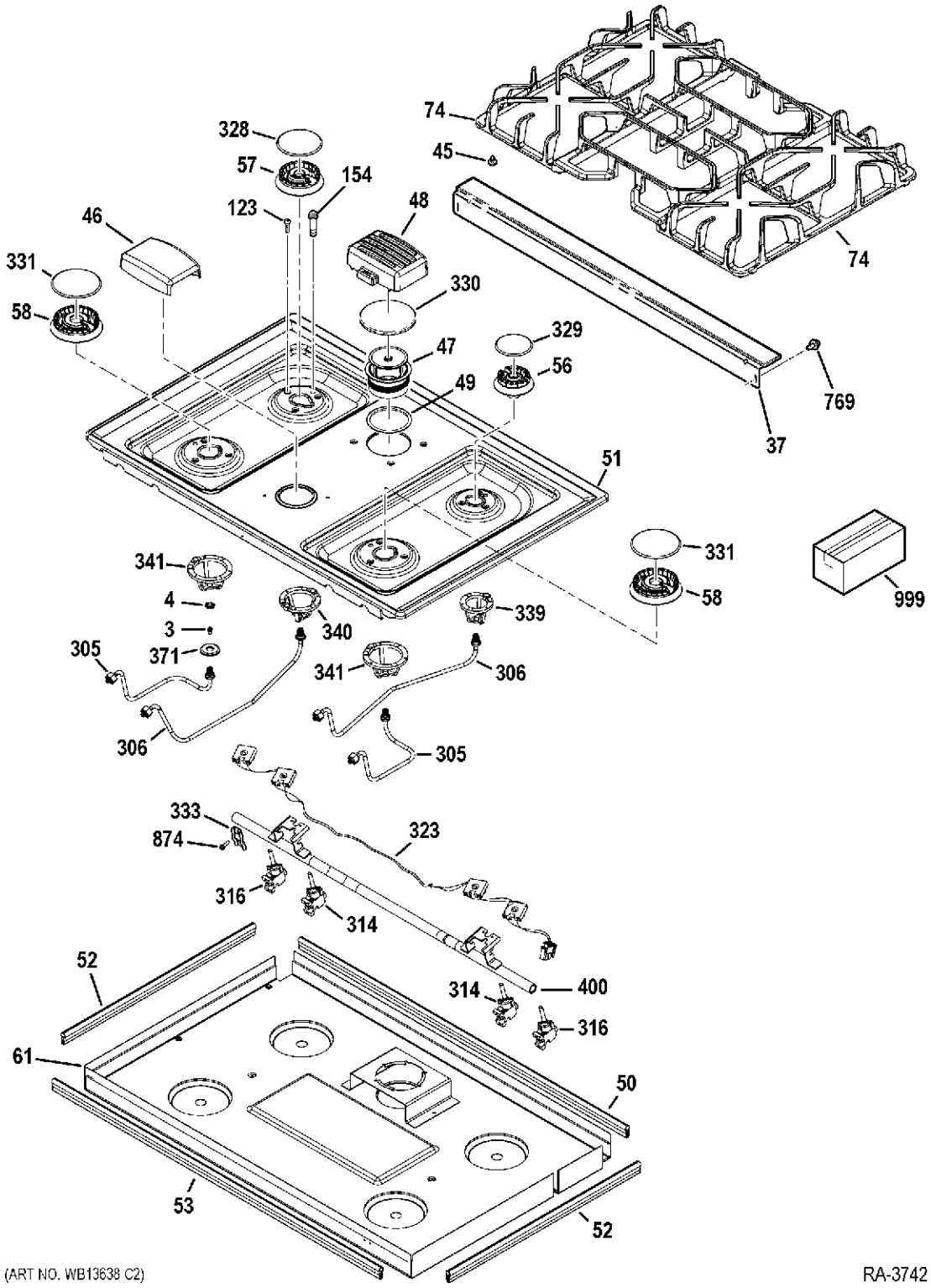

(ART NO. WB13638 C2)

RA-3742